General information

Standard for materials: **IEC 60092-360**

Insulation material:

The following designations are used for insulation materials in this catalog.
All materials are halogen-free.

XLPE stands for cross-linked polyethylene compound. It has excellent mechanical and electrical characteristics.

Sheathing material:

The designation SHF1 stands for thermo-plastic compound. This material is halogen-free, highly flame-retardant and has low smoke emission.

The designation SHF2 stands for oil resistant thermosetting compound. This material is halogen-free, highly flame-retardant and has low smoke emission.

Definition of terms:

Oil resistance
Sheathing material is oil resistant according to method IEC 60811-404 and requirements from IEC 60092-360/SHF2. The oil resistance is demonstrated by immersion in IRM902 oil for 24h at 100°C.

Flame-retardant
To be flame-retardant, the cables must withstand the test specified in IEC standard 60332-3 or IEC 60332-1. Flame-retardant cables do not propagate fire, and are self-extinguishing.

Fire-resistant
IEC 60331-1 Test method for fire with shock at a temperature of at least 830 °C for 90 minutes for cables of rated voltage up to and including 0,6/1,0 kV and with an overall diameter exceeding 20 mm.

IEC 60331-2 Test method for fire with shock at a temperature of at least 830 °C for 90 minutes for cables of rated voltage up to and including 0,6/1,0 kV and with an overall diameter **not** exceeding 20 mm.

IEC 60332-3-22 is the test for bunched cables. Burning time describes how long the burner is directed towards the bunch of cables. The requirement for passing the test is that after the burner has been removed the cables must extinguish themselves. Burning may not occur more than 2.5 m from the burner as shown in the figure.

All Helkama cables comply with the most severe requirements of category A. Amount of burning material is 7 litres/m and burning time 40 minutes.

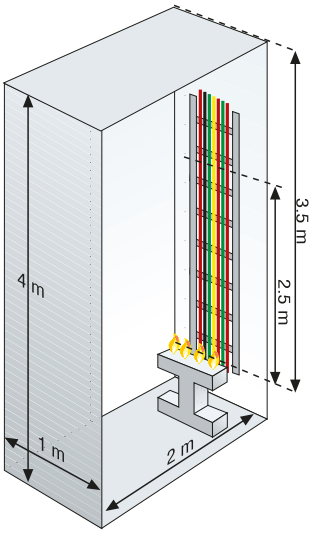

Test on bunched cables IEC 60332-3
Burning is allowed up to max. 2.5 meters from the burner within specified time.

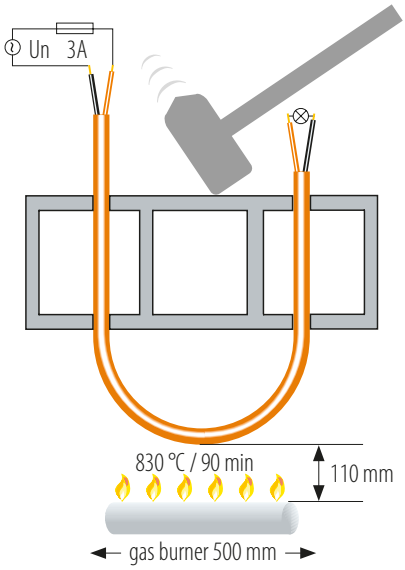

Halogen-free refers to the absence of halogens, such as chlorine and fluorine, and is determined on the basis of halogen content and the acidity of gases of a cable.

IEC 60754-1 determines the halogen content of the material. To meet the requirements as halogen-free the halogen content of the material may not exceed 0,5 % or 5 mg/g.

IEC 60754-2 determines the degree of acidity of gases evolved during combustion.
The limit values are 4,3 for pH and 10 mikroS for conductivity.

Smoke emission refers to visibility in a fire. The greater the light trans-mittance, the better the visibility. When tested in accordance with
IEC 61034-1 (test method) and
IEC 61034-2 (test requirements)
the smoke emission of a cable during fire must not exceed the following values.

27m³ cube smoke chamber

Requirements:
60 % light transmittance

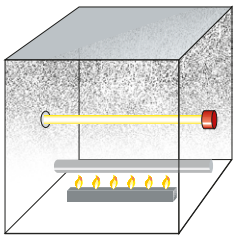

IEC 60332-1 is the test for single insulated wire and cable. Test procedure and requirements according to the picture below.

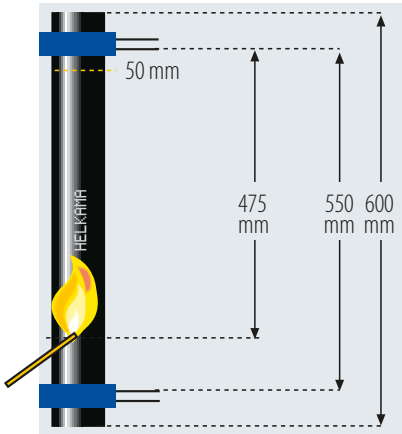

Min. 50 mm of the cable, measured from the upper support, must remain unburned after the specified time.

BENDING RADIUS

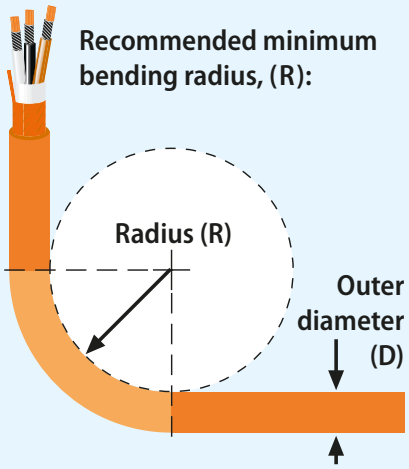

LKM-HF	During installation	R = 6x D	< 25mm
LKMM-HF	During installation	R = 9x D	> 25mm
LKEM-HF	Fixed installation	R = 4x D	< 25mm
	Fixed installation	R = 6x D	> 25mm

	During installation	R = 9x D
	Fixed installation	R = 6x D
LKSM-HF	RFE-HF	
LKSM-EMC	RFE-HF(i)	
RFE-EMC-FRHF	RFA-HF	
RFE-EMC-FRHF(i)	RFA-HF(i)	
LKSM-VFD	RFE-FRHF	
LKMSM-HF	RFE-FRHF(i)	
LKAM-HF	RFA-FRHF	
LKM-FRHF	RFA-FRHF(i)	
LKMM-FRHF	LKSM-SHF2 120°C	
LKSM-FRHF	LKSM-SHF2 120°C	
LKMSM-FRHF	RFE-SHF2 120°C	
LKAM-FRHF	RFE-SHF2 (i) 120°C	

DIAMETER TOLERANCE

Cable outer diameter, mm.	Tolerance
1 – 10	±0,5mm
10,1 – 20	±1,0mm
20,1 – 30	±1,5mm

Cable outer diameter, mm.	Tolerance
30,1 – 40	±2,0mm
40,1 – 50	±2,5mm
50,1 – 60	±3,0mm

CORE IDENTIFICATION

250V pair cables			250V triple cables	250V quad cables	250V multicore cables	
Pair number	a	b	Each triple white-blue-red Cores numbered 1, 2, 3, 4, 5....	(Quad)cable is built up as a star quad with the following identification 1 core white 2 core blue 3 core white 4 core blue	**2-cores**	Black numbers on white base
2	3	4			**3-cores**	Black numbers on white base
3	5	6			**4-cores to 37-cores**	Black numbers on white base
4	7	8				
5	9	10				
etc.						
Each pair white - blue. Cores numbered 1, 2, 3, 4, 5....						

(according to HD 308 S2)

0,6/1kV	Normal type	G-type (with earth conductor)
1-core	BK	
2-cores	BN BU	
3-cores	BN BK GY	Y/G BU BN
4-cores	BU BN GY BK	Y/G BN GY BK
5-cores	1 2 3 4 5	Y/G BU BN BK GY
7-cores and above	1 2 3 4 5 6 7 Black numbers on white base	1 2 3 4 5 6 Y/G Black numbers on white base Last core yellow/green.

1,8/3kV	LKSM-VFD
1-core	BK
3-cores	BN BK GY
3-cores + 3-ground cores	BN BK GY Y/G

BU = Blue, **BN** = Brown,
BK = Black, **GY** = Grey,
Y/G = Yellow/Green

Sheath marking: Lot number, cable type, cable size, voltage, temperature, standards, manufacturer's name, production month and meter marking printed on the sheath

CURRENT RATING

"Current rating (A) at an ambient temperature of 45°C according to the standard IEC 60092-352 0,6/1 kV +90°C marine cables."

Current carrying capacities in continous service at maximum rated conductor temperature of +90°C.

For continuous service. Continuous service for a cable is to be considered as a current-carrying service (with constant load) having a duration longer than three times the thermal time constant of the cable, i.e. longer than the critical duration (see short time duty).

For class 2 conductor cables

Size	N	1	2	3	4	5	7	10	12	14	16	19	24	27	37
	Factor, n	1	0,85	0,7	0,7	0,58	0,52	0,46	0,44	0,41	0,40	0,37	0,35	0,33	0,30
1,0mm²		18	15	13	13	10	9	8	8	7	7	7	6	6	5
1,5mm²		23	20	16	16	13	12	11	10	9	9	9	8	7	7
2,5mm²		30	26	21	21	17	16	14	13	12	12	11	11	10	9
4mm²		40	34	28	28	23									
6mm²		52	44	36	36	30									
10mm²		72	61	50	50	42									
16mm²		96	82	67	67	56									
25mm²		127	108	89	89	74									
35mm²		157	133	110	110	91									
50mm²		196	167	137	137										
70mm²		242	206	169	169										
95mm²		293	249	205	205										
120mm²		339	288	237	237										
150mm²		389	331	272	272										
185mm²		444	377	311	311										
240mm²		522	444	365	365										
300mm²		601	511	421	421										

For class 5 conductor cables

Size		1	2	3	4	5	7	10	12	14	16	19	24	27	37
	Factor, n	1	0,85	0,7	0,7	0,58	0,52	0,46	0,44	0,41	0,40	0,37	0,35	0,33	0,30
1,0mm²		17	14	12	12	10	9	8	7	7	7	6	6	6	5
1,5mm²		22	19	15	15	13	11	10	10	9	9	8	8	7	7
2,5mm²		30	26	21	21	17	16	14	13	12	12	11	11	10	9
4mm²		39	33	27	27	23									
6mm²		50	43	35	35	29									
10mm²		71	60	50	50	41									
16mm²		94	80	66	66	55									
25mm²		123	105	86	86	71									
35mm²		153	130	107	107	89									
50mm²		196	167	137	137										
70mm²		240	204	168	168										
95mm²		284	241	199	199										
120mm²		331	281	232	232										
150mm²		381	324	267	267										
185mm²		429	365	300	300										
240mm²		507	431	355	355										
300mm²		582	495	407	407										

Ambient temperature	+35°C	+40°C	**+45°C**	+50°C	+55°C	+60°C	+65°C	+70°C	+75°C	+80°C
Correction factor	1,10	1,05	**1,00**	0,94	0,88	0,82	0,74	0,64	0,58	0,47

SHORT CIRCUIT CURRENT

Maximum permissible short circuit current.
0,6/1 kV +90°C marine cables.

Based on formula:

$$Ik = 226 \quad X \quad \frac{S}{\sqrt{t}} \quad X \quad \sqrt{\ln \frac{234 + Tk}{234 + Tb}}$$

Formula 1:

$$Ik = 146 \quad X \quad \frac{S}{\sqrt{t}}$$

Ik = Maximum permissible short circuit current.
S = Cross-section of the conductor in mm².
t = Duration of the short circuit in s.
Tk = Maximum rated conductor temperature,
Tb = Maximum rated conductor temperature, normal, °C

Formula 1: For 0,6/1kV cable with XLPE or HF90 with maximum operating temperature of +90°C (Tb) and short circuit temperature of +250°C (Tk).

Cross-section of the conductor in mm²	Duration of the short circuit in s.					
	0,2	0,5	1	2	3	10
1,0	0,3	0,2	0,1	0,1	0,1	0,0
1,5	0,5	0,3	0,2	0,2	0,1	0,1
2,5	0,8	0,5	0,4	0,3	0,2	0,1
4	1,3	0,8	0,6	0,4	0,3	0,2
6	2,0	1,2	0,9	0,6	0,5	0,3
10	3,3	2,1	1,5	1,0	0,8	0,5
16	5,2	3,3	2,3	1,7	1,3	0,7
25	8,2	5,2	3,7	2,6	2,1	1,2
35	11,4	7,2	5,1	3,6	3,0	1,6
50	16,3	10,3	7,3	5,2	4,2	2,3
70	22,9	14,5	10,2	7,2	5,9	3,2
95	31,0	19,6	13,9	9,8	8,0	4,4
120	39,2	24,8	17,5	12,4	10,1	5,5
150	49,0	31,0	21,9	15,5	12,6	6,9
185	60,4	38,2	27,0	19,1	15,6	8,5
240	78,4	49,6	35,0	24,8	20,2	11,1
300	97,9	61,9	43,8	31,0	25,3	13,9
	Short circuit current in kA					

SHORT CIRCUIT FACTOR

Short Circuit Factor can be calculated by following formula:

$$\text{SHORT CIRCUIT FACTOR} = \frac{\text{SHORT CIRCUIT CURRENT}}{\text{CURRENT RATING}}$$

RATED VOLTAGES

Designating the of the rated voltages of cables are **U_o/U (U_m)**, where

U_o is the rated power-frequency voltage between phase conductor and earth or metallic screen, for which the cable is designed.

U is the rated power-frequency voltage between phase conductors for which the cable is designed.

U_m is the maximum value of the "highest system voltage" for which the cable may be used.

For DC voltages, maximum of 1,5 times the AC voltage. may be provided that the voltage to earth does not exceed U_{0DC}.

Cable voltage	AC			DC	
	U_0	U	U_m	U	U_{0DC}
250V	150V	250V	300V	375V	250V
0,6/1kV	0,6kV	1,0kV	1,2kV	1,5kV	0,9kV
1,8/3kV	1,8kV	3,0kV	3,6kV	–	–

SHORT TIME DUTY

Short time duty according to the standard IEC 60092-352 0,6/1 kV +90°C marine cables.

If a cable is intended to supply motor or equipment operating for periods of half an hour or one hour, its current rating given in table "current rating", may be increased using the relevant correction factors given by formula:

$$\text{correction factor} = \sqrt{\frac{1{,}12}{1-\exp(-t_s/T)}}$$

(t_s = service time, min. **T** = Time constant, min.)

$T = 0{,}245 \times d^{1{,}35}$
(**d** = Overall diameter of the cable, mm.)

Overall diameter of the cable, mm.	Service time, min.		Time constant, min.	Critical duration, min.
	30	60	T	3x T
1	1,058	1,058	0,245	0,735
2	1,058	1,058	0,625	1,87
3	1,058	1,058	1,08	3,24
4	1,058	1,058	1,59	4,78
5	1,058	1,058	2,15	6,46
6	1,058	1,058	2,75	8,26
7	1,058	1,058	3,39	10,2
8	1,059	1,058	4,06	12,2
9	1,059	1,058	4,76	14,3
10	1,061	1,058	5,48	16,5
20	1,126	1,066	14,0	41,9
30	1,255	1,105	24,2	72,5
40	1,403	1,173	35,6	107
50	1,554	1,254	48,2	145
60	1,705	1,341	61,6	185
	Correction factor.			

INTERMITTENT SERVICE

Correction factor for intermittent service according to the standard IEC 60092-352

The correction factor given hereby has been roughly calculated for periods of 10 min, of which 4 min are with a constant load and 6 min without load.

Intermittence period = 10min.
Intermittence ratio = 40%.

$$Fi = \sqrt{\frac{1-\exp(-10/T)}{1-\exp(-4/T)}}$$

Overall diameter of the cable, mm.	Correction factor.
1	1,000
2	1,001
3	1,012
4	1,042
5	1,083
6	1,127
7	1,170
8	1,208
9	1,242
10	1,273
20	1,433
30	1,490
40	1,518
50	1,534
60	1,544

VOLTAGE DROP

Cable types: LKM-HF, LKSM-HF, LKAM-HF, LKM-FRHF, LKSM-FRHF (Cables with class 2 conductor)

Size	Resistance at +20°C ohm/km	Resistance at +90°C ohm/km	Voltage reduction mV/Am *)	Resistance at +45°C ohm/km	Current rating A **)	Voltage reduction mV/m ***)
1.0mm²	18,1	23,1	46,2	19,9	18	0,72
1.5mm²	12,1	15,4	30,9	13,3	23	0,61
2.5mm²	7,41	9,45	18,9	8,14	30	0,49
4mm²	4,61	5,88	11,8	5,06	40	0,41
6mm²	3,08	3,93	7,85	3,38	52	0,35
10mm²	1,83	2,33	4,67	2,01	72	0,29
16mm²	1,15	1,47	2,93	1,26	96	0,24
25mm²	0,727	0,927	1,85	0,798	127	0,20
35mm²	0,524	0,668	1,34	0,575	157	0,18
50mm²	0,387	0,493	0,987	0,425	196	0,17
70mm²	0,268	0,342	0,683	0,294	242	0,14
95mm²	0,193	0,246	0,492	0,212	293	0,12
120mm²	0,153	0,195	0,390	0,168	339	0,11
150mm²	0,124	0,158	0,316	0,136	389	0,11
185mm²	0,0991	0,1264	0,253	0,1088	444	0,097
240mm²	0,0754	0,0961	0,192	0,0828	522	0,086
300mm²	0,0601	0,0766	0,153	0,0660	601	0,079

Cable types: LKM-HF FLEX, LKSM-HF FLEX, LKEM-HF (Cables with class 5 conductor)

Size	Resistance at +20°C ohm/km	Resistance at +90°C ohm/km	Voltage reduction mV/Am *)	Resistance at +45°C ohm/km	Current rating A **)	Voltage reduction mV/m ***)
0,75mm²	26,0	33,2	66,3	28,6	14	0,80
1.0mm²	19,5	24,9	49,7	21,4	17	0,73
1.5mm²	13,3	17,0	33,9	14,6	22	0,64
2.5mm²	7,98	10,18	20,4	8,76	30	0,53
4mm²	4,95	6,31	12,6	5,44	39	0,42
6mm²	3,30	4,21	8,42	3,62	50	0,36
10mm²	1,91	2,44	4,87	2,10	71	0,30
16mm²	1,21	1,54	3,09	1,33	94	0,25
25mm²	0,78	0,995	1,99	0,857	123	0,21
35mm²	0,554	0,706	1,41	0,608	153	0,19
50mm²	0,386	0,492	0,984	0,424	196	0,17
70mm²	0,272	0,347	0,694	0,299	240	0,14
95mm2	0,206	0,263	0,525	0,226	284	0,13
120mm²	0,161	0,205	0,411	0,177	331	0,12
150mm²	0,129	0,164	0,329	0,142	381	0,11
185mm²	0,106	0,135	0,270	0,116	429	0,10
240mm²	0,0801	0,102	0,204	0,088	507	0,09
300mm²	0,0641	0,082	0,163	0,070	582	0,08

Cable types: LKSM-HF 250V, RFE-HF, RFE-HF(i), RFA-HF, RFA-HF(i), RFE-FRHF, RFE-FRHF(i), RFA-FRHF, RFA-FRHF(i)

Size	Resistance at +20°C ohm/km	Maximum conductor temperature, °C	Resistance at +45°C ohm/km	Voltage reduction mV/Am at +45°C	Resistance at +90°C ohm/km	Voltage reduction mV/Am at +90°C
0,5 mm²	40,4	90	44,4	88,7	51,5	103,0
0,75 mm²	26,0	90	28,6	57,1	33,2	66,3
1,5 mm²	12,8	90	14,1	28,1	16,3	32,6

*) at +90°C **)For continuous service (single core, ambient temperature +45°C) ***)at maximum current rating for continuous service at +45°C